E/ONE EXTREME SERIES

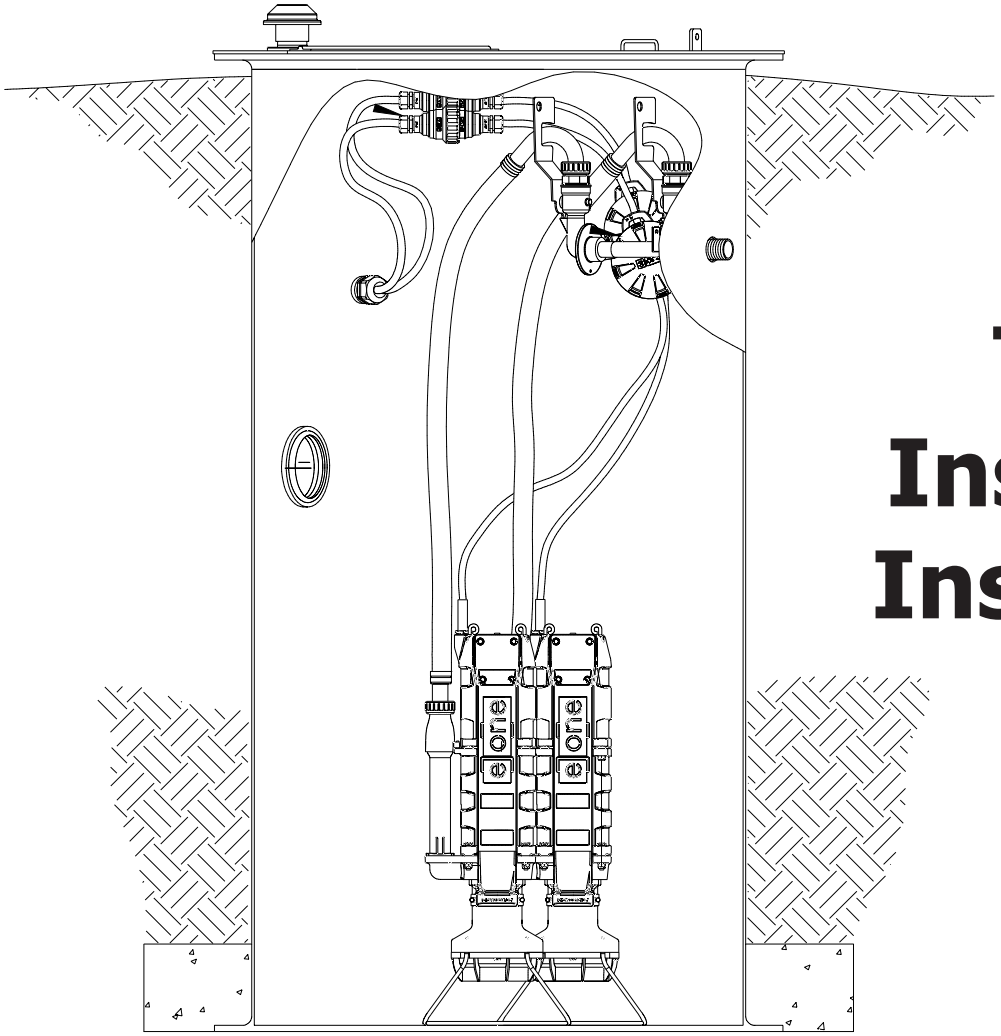

2014i

Typical Installation Instructions

PA1779P01 Rev B

2014i Installation Instructions

The 2014i station is a well-engineered system designed to provide low-pressure sewer service to individual residences or buildings. Proper installation of this equipment will ensure years of trouble-free service.

This is a sewage handling pump and must be vented in accordance with national and local plumbing codes. This pump is not to be installed in locations classified as hazardous. All piping and electrical systems must be in compliance with applicable standards, local and national codes and to the satisfaction of relevant authorities.

PRODUCT DESCRIPTION

The 2014i station consists of 2 grinder pumps, tank, pump alarm panel and connecting control/power cable. The tank is a fiberglass basin complete with a hinged aluminum lid. Sewage enters the tank through the 150 mm DWV uPVC (160.3 mm OD) (standard) inlet pipe where it is ground into fine particles by the grinder pump. The in-line pumping mechanism discharges the macerated sewage to a pressure main, gravity main or a remote treatment site. The pumps are a semi-positive displacement type capable of operating at discharge pressures up to 56 m TDH. Ample tank storage capacity in conjunction with integral level sensing controls provides for economic, on-demand, operation of the grinder pump.

ITEMS REQUIRED FOR INSTALLATION

Prior to beginning installation of the 2014i station, a thorough review of these installation instructions is recommended. This will likely eliminate problems with inconvenient piping and cable locations or due to unavailable materials or equipment. In addition to the components furnished with each 2014i station, the following items will be needed to support installation:

- Electrical supply in accordance with the specification on the pump nameplate
- Bedding material (Section 2)
- Concrete ballast (Section 3)
- 150 mm DWV uPVC (160.3 mm OD) inlet pipe (from residence or building sewer) (Section 5)
- PE 100, 40 mm OD, PN 16 SDR 11 polyethylene discharge pipe to force or gravity main (recommended – Section 6)
- Compactible backfill material (Section 9)
- The following tools:
  - Pipe thread sealant (suitable for materials being joined)
  - Pipe wrenches
  - Electric drill
  - Common hand tools

INSTALLATION STEPS

The following instructions will provide the necessary information to properly install the 2014i station.

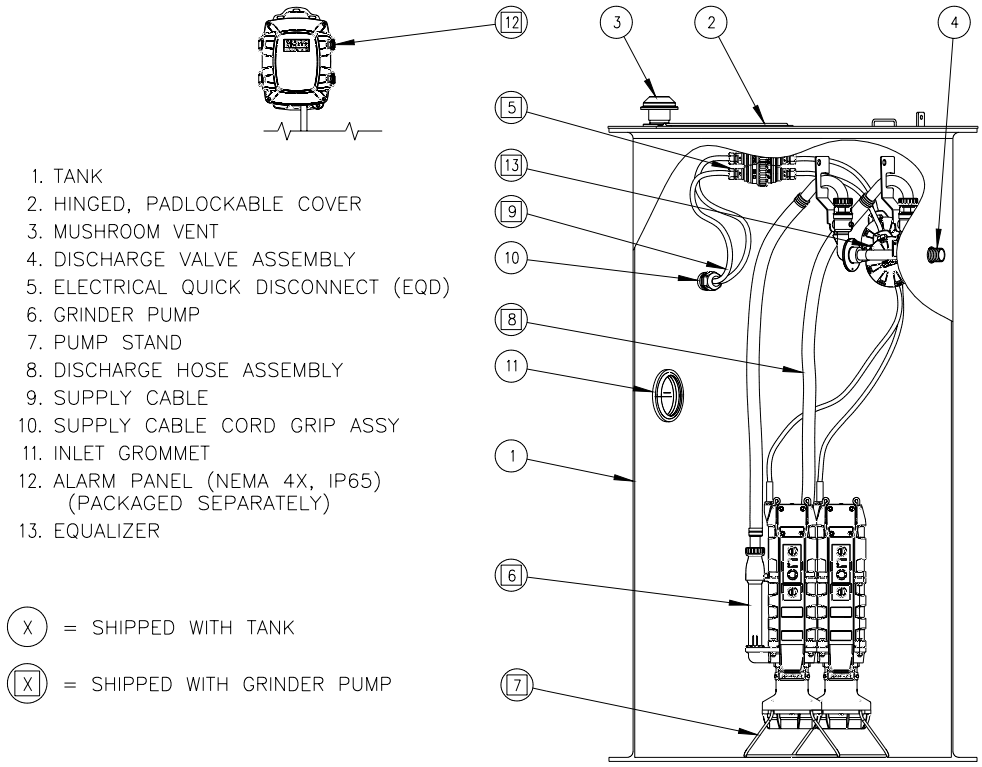

Fig. 1 - Station Components

1. Station Unpacking

(Figure 1)

The station alarm panel, grinder pumps and tank are shipped to the job site separately. Inspect the tank (1) and ensure that it sustained no damage during shipment. Proper handling of the fiberglass tank will ensure reliable performance. Do not drop the fiberglass tank or roll it on its side. Only a non-marring sling should be used to lift the fiberglass tank (see Lifting Instructions). Ensure that all lifting equipment is rated for the load being lifted. Open the aluminum cover of the fiberglass tank (2) and verify that the supply cable cord grips (10), the discharge valve assembly (4) and the inlet grommet (11) (if field-installed not specified) are installed in the tank. The balance of the factory provided components were delivered with the grinder pump units. Inspect the shipping cartons for signs of any damage sustained during shipment. Open the pump shipping carton(s) and verify that the grinder pumps (6), pump stands (7), discharge hose assemblies (8), equalizers (13), and supply cables (9) are enclosed. Open the alarm panel (12) shipping carton(s) and ensure that alarm panel has sustained no shipping damage. If damage is suspected on any of the components, do not proceed with installation. Notify an Environment One representative about any missing components.

2. Site Excavation

(Figure 2)

Excavate a hole of sufficient depth and width to accommodate the tank, underground piping and required backfill material as well as providing adequate working space for plumbing and electrical connections. The base of the excavated hole should be level and prepared with proper bedding material, such as gravel, in accordance with the site engineer's requirements. The depth of the excavation must be sufficient to accommodate the bedding material and tank burial to the correct level (Figure 2). The size, shape and shoring requirements of the excavation will be based on the soil conditions and should be in accordance with the site engineer's recommendation and safety requirements.

3. Tank Installation

(Figure 2)

Improper handling of the fiberglass tank may result in damage and, ultimately, failure of the station. Care should be taken during lifting and placement to prevent impacting or otherwise damaging the tank. A non-marring sling should be used when lifting the tank by the fiberglass surfaces. Ensure that lifting sling is rated for the load being lifted. Lifting chains or cables should never be placed in direct contact with the fiberglass tank surfaces. Place the tank on the level bed of fill material in the excavated hole. Orient the installed inlet grommet, as required, to align it with the proposed inlet piping path (see Section 5 if inlet penetration is to be field-installed). Ensure that the grade of the inlet pipe is in compliance with applicable standards, local and national codes and to the satisfaction of the relevant authorities. A concrete anchor is required to prevent flotation of the fiberglass tank when high groundwater is present. Ensure that the volume of concrete used complies with the site engineer's requirements. Recommended ballast volumes are presented in Chart 1 of the ballast calculation sheet provided with this manual. Concrete ballast should be cast in place around

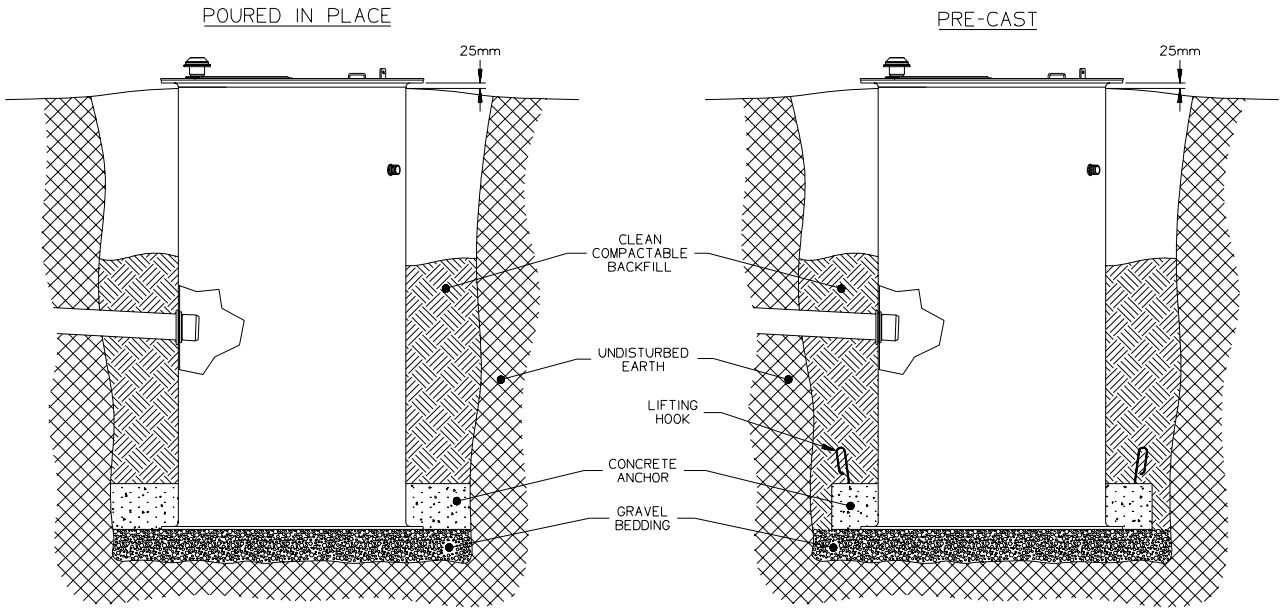

Fig. 2 - Tank Installation

the tank in the excavation. **Do not pour the concrete ballast above the inlet pipe location.** If the ballast must be poured above this level, proceed with installation of the inlet piping (Section 5) before pouring the concrete. The inlet pipe must be sleeved with a 300 mm tube prior to pouring. The tank should be filled with water, to a level above the specified ballast height to prevent shifting during the concrete pour.

Alternatively, precast concrete, around the tank bottom, may be used for ballast (Figure 2). Do not pour ballast above the inlet location. If this ballast method is used, lifting hooks must be anchored in the concrete to support subsequent handling of the tank. The lifting hooks must be adequate to support the combined weight of the tank and concrete ballast, and should be sized and installed in accordance with the site engineer's recommendation. Place the ballasted tank in the excavated hole using the lifting hooks. **Do not lift the tank by any of the fiberglass surfaces if precast ballast is utilized.**

4. Venting

(Figure 3)

The 2014i station is a sewage handling pump and requires ventilation for proper and safe operation. The station is equipped with a 50 mm vent which is located on the aluminum cover (Figure 3). The vent allows for continuous venting of the station.

Do not bury the 2014i station above the specified burial level. Burial above this level may result in infiltration of ground water and/or soil. Additionally, if the water level outside of the station is expected to go beyond the surrounding grade (flooding) an alternative cover and vent arrangement will be required. **Consult the factory if flood conditions are possible where the station is to be installed.**

5. Inlet Installation

(Figure 4)

The station is supplied with a standard grommet to accept a 150 mm DWV uPVC (160.3 mm OD) sewer inlet pipe. The grommet is self-sealing and does not require the use of additional sealant or adhesives. Other grommet sizes are available upon request. Typically, the drilled penetration for the inlet pipe grommet was made at the factory. Consult E/One Instructions PA1779P02 if field installation of the inlet grommet was specified on the 2014i station. Verify that the grommet supplied with the 2014i station will accommodate the selected inlet piping.

Place a mark on the inlet pipe 90 mm from the end that will enter the fiberglass tank. A bevel should be ground or filed on the pipe end to aid in installation through the grommet. Clean the grommet and pipe surfaces to remove any debris. Apply a film of pipe soap or dish soap to the outside surface of the inlet pipe end and the inside of the grommet. Insert the pipe end into the grommet and push the inlet pipe into the fiberglass tank until the 90 mm mark lines up with the grommet outside edge. Inspect the grommet flange on the outside of the tank. The flange should be flush against the tank wall and completely visible when the pipe and grommet are installed properly.

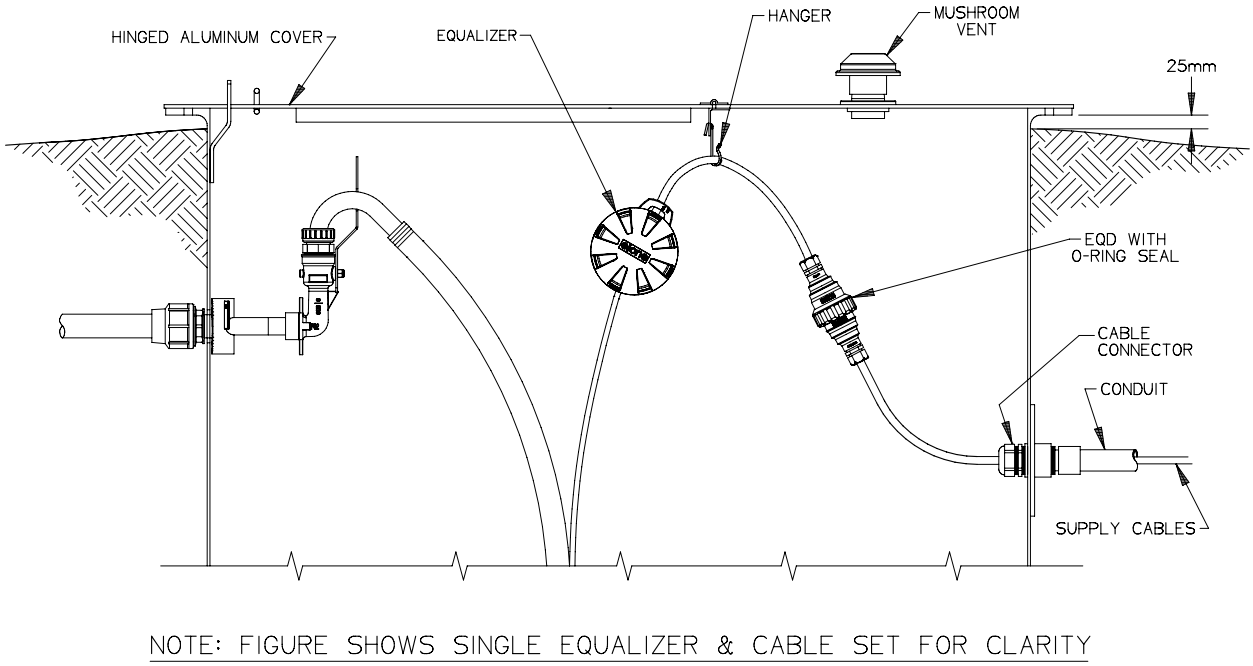

Fig. 3 - Venting & Electrical Connections

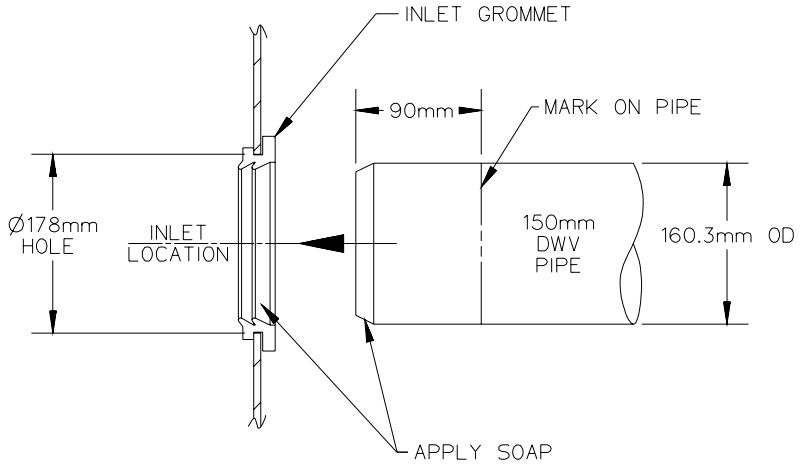

Fig. 4 - Inlet Installation
(Standard, Factory-Drilled)

6. Tank Discharge Piping Connection
(Figure 5)
Connect the tank discharge piping to the threaded tank fitting. The 1-1/4" BSP male thread on the discharge fitting will accommodate a variety of pipe materials and fittings. A conversion pipe nipple has been provided with the station to support connection to BSP threaded pipe. Install the conversion nipple in the tank discharge fitting with the "B" marking adjacent to the discharge pipe connection (Figure 5). Discharge piping must be selected in accordance with local and national plumbing codes. If allowable, the use of PE100, 40 mm OD, PN16, SDR 11 polyethylene pipe is recommended. If polyethylene discharge piping is used, compression type fittings that provide a smooth inner passage should be utilized. It is recommended that an isolation valve and a redundant check valve assembly (boundary kit) be installed between the station discharge fitting and the street main on all installations. Never use a ball type valve as a check valve. E/One recommends the valves be installed as close to the public right-of-way (road reserve) as possible. Check local codes for applicable requirements.

CAUTION: Redundant check valves on station laterals and anti-siphon/check valve assemblies on the grinder pump cores should not be used as system isolation valves during line tests.

7. Alarm Panel Mounting
Before proceeding, verify that the supply voltage is the same as the motor voltage shown on the grinder pump nameplate. Determine the location of the station alarm panel. The alarm panel may be mounted on a pole or directly on an outdoor wall surface. The mounting location selected must be visible from the grinder pump station location and provide general visibility to the occupants of the building. The panel's audible alarm should be easily heard by the occupants of the building. An alarm device is required on every installation. There shall be no exceptions. Mount the alarm panel to a wall or pole, securing it by mounting flanges with screws. Any penetrations into the Environment One alarm panel shall be undertaken in such a way as to maintain the integrity of the IP rating (NEMA 4X, IP65).

8. Electrical Connection
8a. Supply Panel to E/One Alarm Panel
Wiring of supply panel and Environment One alarm panel shall be carried out per the wiring instructions included with the specific panel provided and to the satisfaction of relevant authorities in accordance with AS3000.

8b. Grinder Pump to Panel
(Figure 5)
The 2014i is provided with cables for connection between the station and the alarm panel. These cable are referred to as the "supply cables." The supply cables are shipped coiled inside the grinder pump shipping carton. Each supply cable, a six-conductor tray cable, may, under conditions outlined in AS3000, be directly buried. However, Environment One recommends the cables be located within a suitable, rigid, heavy-duty conduit. Minimum depth of the conduit shall be 500 mm. The cables must be provided with adequate mechanical protection and identification per AS3000. The cables and mechanical protection shall be installed with adequate allowance for ground movement/ expansion.
NOTE: Wiring must be installed in compliance with AS3000.

8c. Procedure for installing E/One supply cable:
(Figure 3)
1) Open the lid of the station and locate the supply cable connector on the wall the tank. Loosen the nut on the connector and feed the free end (the end without the E/One EQD housing) of the supply cables through the connector from the inside of the station. Pull the supply cables out through the connector, leaving only enough supply cable within the tank to reach the center of the aluminum cover. The cable will be supported in the station by the hanging bracket provided with the equalizer.
****IMPORTANT:** *Allow only sufficient length of cable within the tank to support hanging of the cable and equalizer on the aluminum cover support frame. The portion of the cables between the EQD and the molded in cable breather should be secured in position using the provided hangers to ensure that the pumps*

function properly (Figure 3). ***Do not leave excess cable in the station.***

2) Run the cable underground, in a trench or tunnel in a suitable conduit per AS3000, to the location of the E/One panel. Use care when installing and burying the supply cables. If the cables are cut or otherwise damaged it may result in a pump malfunction. The cables and protection must be installed with adequate allowance for ground movement and expansion. Connections made at the panel are shown in the wiring diagram included with the panel.

3) Retighten the supply cable connector nut. **This connection must be tight or groundwater will enter the station.**

9. Tank Backfill

Proper backfill is essential to the long-term reliability of the 2014i grinder pump station. The choice of backfill material is dependent upon the local soil and groundwater conditions and must be in accordance with the site engineer's recommendation. The recommended method of backfilling is to surround the unit to the burial level (25 mm below the tank top flange per Figure 2) with proper fill. The backfill material shall be to the satisfaction of the local relevant authority. Backfill shall be free of organic and compressible material and shall be free of voids and cavities. Compaction moisture content shall generally be 1% dry and 2% wet of the optimum content. Backfill shall be compacted to the minimum standard dry density ratios, AS1289, 95%. Non-compactible clays and silts are not suitable backfill for this or any underground structure such as inlet or discharge lines. If you are unsure of the consistency of the native soil, it is recommended that a geotechnical evaluation of the material be obtained before specifying backfill. Another option is the use of a flowable fill (i.e., low slump concrete); this is particularly attractive when installing grinder pump stations in augured holes where tight clearances make it difficult to assure proper backfilling and compaction with dry materials. Flowable fills should not be dropped with more than 1-1/4 m between the discharge nozzle and the bottom of the hole since this can cause separation of the constituent materials.

10. Grinder Pump Stand Assembly

(Figure 6)

For each grinder pump:

Temporarily rest the grinder pump on its side. Using a block of wood

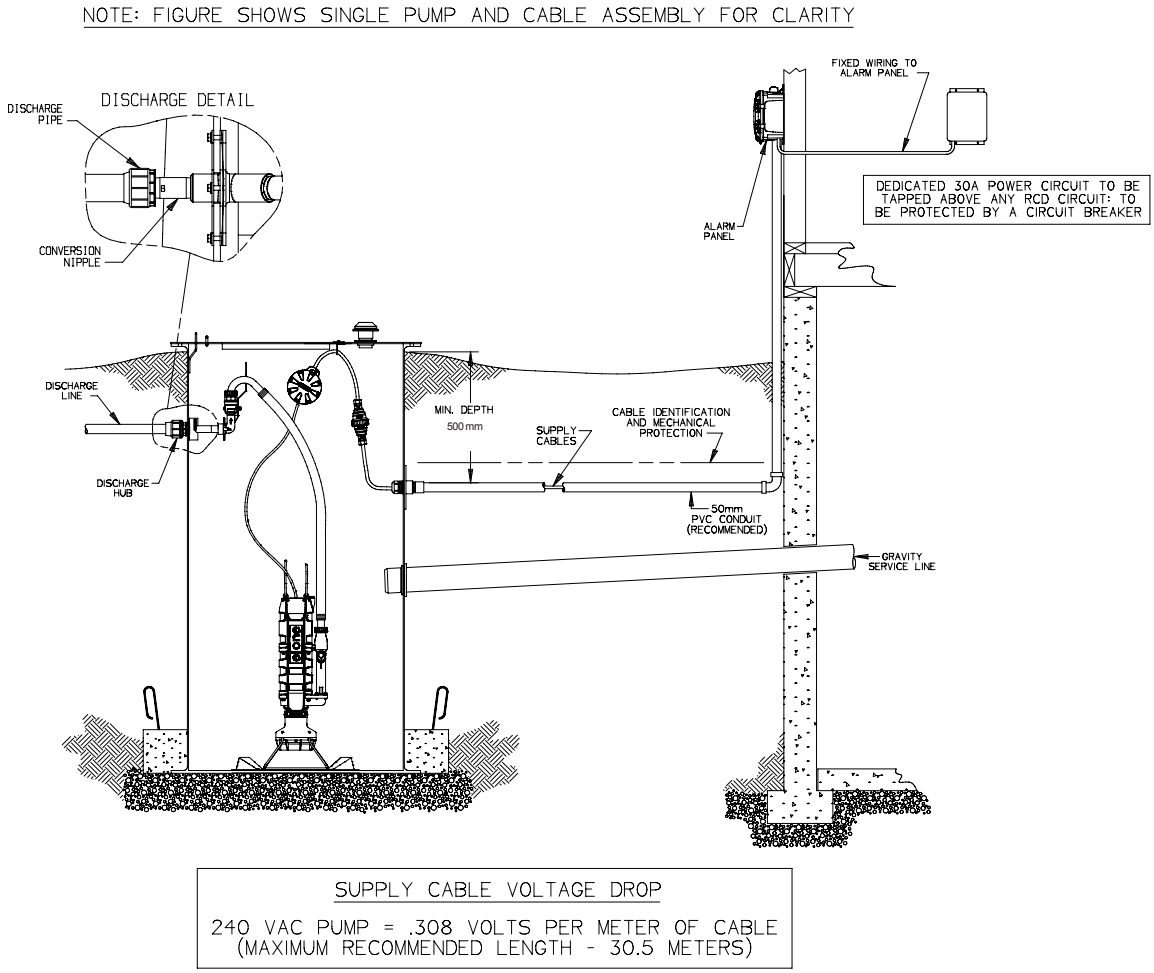

Fig. 5 - Typical Station Installation

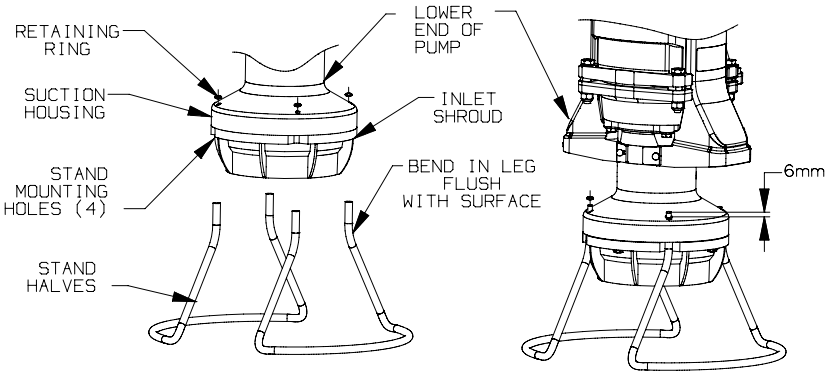

Fig. 6 - Pump Stand Installation

or similar object, prop up the lower pump end to allow installation of the pump stand. Align the two legs of each pump stand half with two of the holes in the pump lower end. Push the stand legs into the pump lower end until the bend in each stand leg bottoms against the pump-housing surface. Turn the pump upright on the installed stand. Install one stand retaining ring on each of the four leg ends protruding through the pump lower end. The retaining rings are a pressure fit and are easily tapped in place using a 8 mm socket or nut driver and mallet. The retaining rings should only be driven onto each leg approximately 6 mm. Do not attempt to bottom the rings against the angled pump surface as this may distort the ring and lessen its holding power.

11. Grinder Pump Installation

(Figure 7)

The grinder pump should only be installed in the station upon connection and commissioning of the discharge piping, connection of the inlet pipe from the building sewer, and upon availability of pump station power from the provided alarm panel to support startup testing (Section 12). Prior to installing the grinder pumps in the tank, flush the inlet pipe with water to force any miscellaneous debris in the sewer line into the tank. Heavy debris such as sand, clay, etc. should be removed from the tank before installing the grinder pumps. The grinder pumps are supplied with all of the necessary plumbing components to connect the pump discharges to the tank discharge valve assembly.

For each grinder pump:

1. Ensure that one slip nut and one split ring are properly located behind the raised bead on each of the discharge hose.
2. Place one backup ring and one O-ring on the end of the discharge hose assembly between the raised bead and the edge of the hose assembly. Note that the molded groove in the backup ring is designed to be placed adjacent to the rubber O-ring.
3. Slide the straight, stainless steel end of the discharge hose assembly into the top of the check valve assembly on the grinder pump until the raised bead contacts the check valve housing. Both the O-ring and backup ring should slide into the bore of the check valve housing. The hose should be oriented as shown in Figure 7 to support alignment with the station discharge valve assembly.
4. Secure the hose assembly to the pump by tightening the slip nut onto the check valve housing. Overtightening the slip nut may damage the check valve. The slip nut should only be tightened to 1/4 to 1/2 turn beyond hand-tight.
5. Using the pump lifting harness, lower the grinder pump into the tank until the pump stand rests on the bottom surface of the fiberglass tank. The pumps should be centered in one of the raised rings on the basin bottom. Orient the pump in the basin so that the curved end of the discharge hose is aligned with the discharge valve assembly receiver.
6. Slide the curved, stainless steel end of the discharge hose assembly into the discharge valve assembly receiver until the raised bead contacts the top of the valve receiver. Both the O-ring and backup ring should slide into the bore of the valve receiver.
7. Secure the hose assembly to the discharge valve by tightening the slip nut onto the valve receiver. Do not overtighten the slip nut.
8. The valve handle(s) should be left in the “off” (horizontal) position until system start up testing is conducted.

After completing the plumbing, proceed with connecting the pump power cables. Each grinder pump power cable is supplied with the mating half of the EQD connector. Ensure that the EQD O-rings are in place on the grinder pump power cords (Figure 3). Plug the pump power cables into the supply cable EQD connectors. Note that the EQD halves are “keyed” and the plug connections can only be made one way. Secure the EQD connection by tightening the locking ring until it stops. Using the provided hanging hooks, secure the EQD and supply cables to the reinforcing angle on the aluminum cover as shown in Figure 3. Multiple 6 mm holes are provided on the cover angle for this purpose.

12. Start-Up Test Procedure

When the system is completely installed, the station should be checked to ensure proper installation and reliable performance.

SYSTEM INSPECTION

Perform the following visual inspections:

- Proper burial depth — the tank should have been buried to the correct level (tank flange should be approximately 25 mm above grade).
- Proper grading — the surrounding soil should be graded down, away from the station.
- Station supply cables — the station supply cables must not be exposed outside of the station. Suitable conduit per AS3000 must be used. Proper burial (500 mm) shall be maintained
- Alarm panel — ensure that the alarm panel is properly mounted and free of any damage. Verify that the alarm panel has been wired properly in accordance with the wiring instructions provided with the panel.

ELECTRICAL TESTS

The following electrical tests are recommended prior to operating the grinder pump station. These tests require the use of appropriate electrical test equipment and should only be performed by qualified personnel trained in the safe operation of this equipment and electrical system service.

1. Ensure that the electrical power supplying the alarm panel is off.
2. Ensure that all circuit breakers in the alarm panel are in the "off" position.
3. Perform continuity test procedure in accordance with the 2000i Grinder Pump Service Manual.
4. Turn on the power to the alarm panel from the building service panel.
5. Using a test (volt) meter, verify that the incoming panel voltage is within 10% of the pump nameplate voltage (for 240V pump, voltage at panel must be 216V to 264V). **If the voltage is outside of this range, do not continue with station start-up. The voltage problem must be corrected prior to proceeding.**

START-UP TEST

The following test **must** be performed prior to placing the system in service:

1. Ensure all service and alarm panel breakers are in the "off" position.
2. Open both discharge valves in the tank by swinging the valve handles to the "on" (vertical) position.
3. Open any additional discharge lines. Some installations may have additional discharge line valves before entering the street main.
4. Turn on power to the alarm panel, from the building service panel.
5. Turn on the alarm circuit breaker (not labeled "Pump 1" or "Pump 2") located on the right-hand side of the group of breakers. No lights should illuminate on the control board unless the water level is already above the alarm level; if so, the red LED will illuminate.
6. Fill the tank with water until the alarm turns on. There is a 3.5-minute delay after reaching the alarm level (approximately 850 mm from the tank bottom) before the alarm will sound. Delay may vary depending on specific panel settings. Consult the literature provided with the panel for alternate operational settings. Push the silence switch located under the left-hand side of the panel to silence the alarm.
7. Turn off all circuit breakers in the alarm panel. Slide the "Auto/Both" switch to the "Both" (down) position. Again, turn on the alarm circuit breaker.
8. Turn on the Pump 1 circuit breaker. Pump 1 should start and the left, yellow and green LED's for Pump 1 should illuminate (check Pump 1

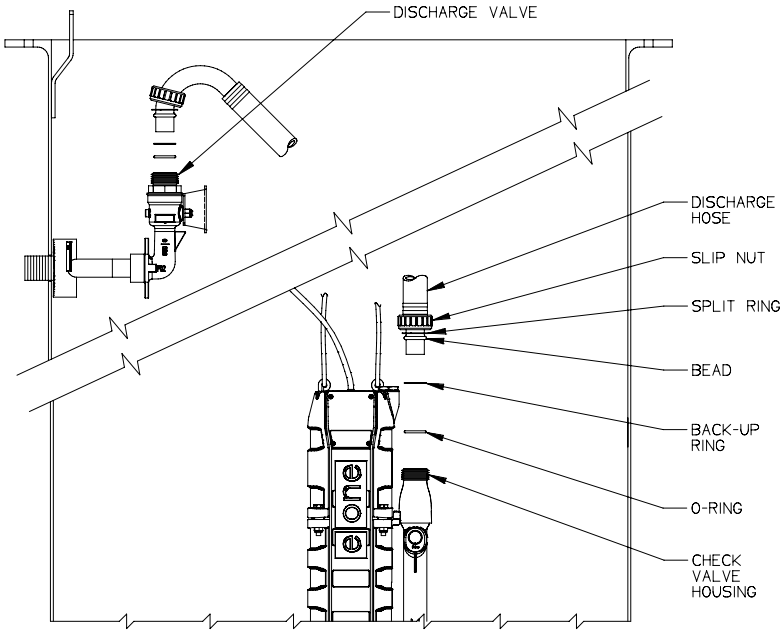

NOTE: FIGURE SHOWS SINGLE PUMP & DISCHARGE HOSE FOR CLARITY

Fig. 7 - Grinder Pump Installation

amperage per “Operational Electrical Test” section). Pump 1 will pump the water level down (approximately 330 mm from the tank bottom) and shut off.

9. Turn off the Pump 1 breaker and turn on the Pump 2 breaker. Fill the station with water until Pump 2 turns on (approximately 430 mm from the tank bottom). The Pump 2 right, yellow and green LED’s should illuminate (check Pump 2 amperage per “Operational Electrical Test” section). Pump 2 will pump the water level down (approximately 330 mm from tank bottom) and shut off.
10. Turn off all alarm panel breakers. Slide the “Auto/Both” switch up to the “Auto” position.
11. Turn on all panel breakers when the station is ready to be placed in service.

OPERATIONAL ELECTRICAL TEST

The following electrical test is recommended in conjunction with the Start-Up Test of the grinder pump station. This test requires the use of appropriate electrical test equipment and should only be performed by qualified personnel trained in the safe operation of this equipment and electrical system service.

1. The current to the grinder pumps should be measured in the alarm panel, at the black wires supplying the pump station (supply cable).
2. Using an ammeter, measure the current in the black wire while the pump is operating.
3. The current should be between 5 amps and 6.7 amps.
4. Higher amperage indicates higher discharge pressure. Measured current in excess of 6.7 amps could indicate a blocked or closed discharge line. Correct any blockage problems and confirm that the current is within the acceptable range. **If the current remains outside of the acceptable range, and no discharge blockage is detected, contact your local Environment One or qualified service representative.**

Lifting Instructions

FAILURE TO FOLLOW THESE INSTRUCTIONS COMPLETELY WILL VOID WARRANTY.

1. Transporting unit to installation site:
If the station has been shipped secured to a pallet, lift the unit from the bottom during transportation. Alternatively, lift the unit using 2 nylon straps wrapped around the tank exterior, just below the cover flange as shown below. **Never roll a station or move it on its side.**

2. No Ballast (to be poured in place):
If the concrete anchor is to be poured while the station is in place lift the unit using 2 nylon straps wrapped around the tank exterior just below the cover flange, as shown below. Keep station oriented vertically to avoid any damage.

3. Precast Ballast:
Never lift a station that has ballast attached by any means except the lifting hooks. The weight of the concrete will damage the station if you attempt to lift it from any part of the station.

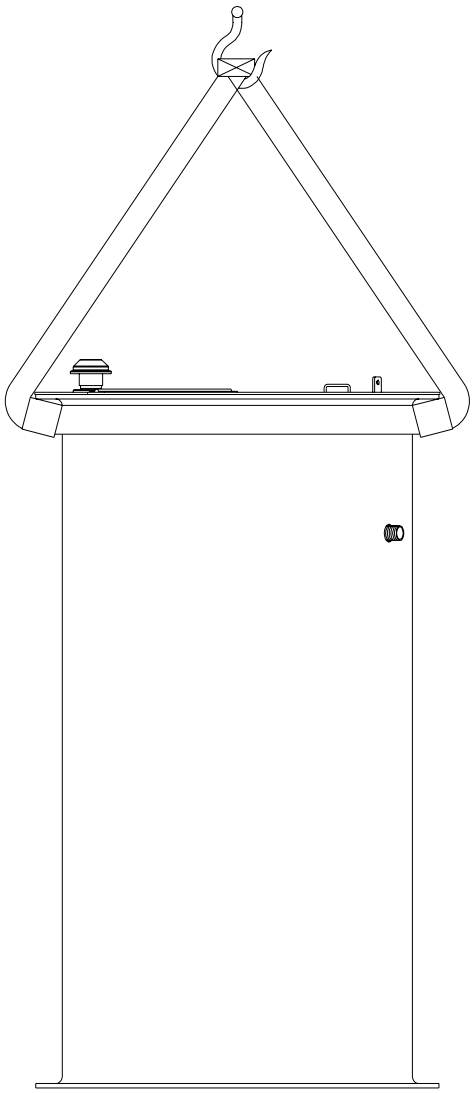

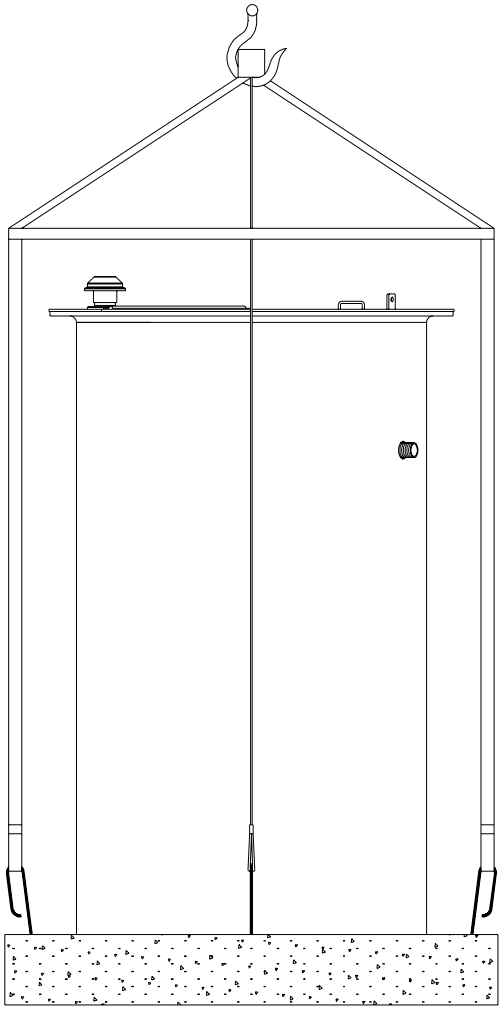

2014i Grinder Pump Station Ballast Calculations

A ballast, or concrete anchor, of proper volume and weight is required on most in-ground installations. The following section explains how to arrive at the correct size ballast. The amount of ballast needed is equal to the weight it would take to counterbalance the buoyant force exerted on a fully submerged station.

Installation Site Assumptions

1. Water table — under worst case, the ground water level is assumed to be at the finished grade level.
2. Backfill materials are per E/One Installation Instructions (Model 2014i).
3. The consulting engineer should perform a soil test to determine if the assumptions that have been made are valid for the specific installation site. If the site conditions differ from these assumptions, then the consulting engineer may revise the calculations as shown in this document.

Physical Constants

1. Density of Water = 1000 kg/m^3
2. Density of Concrete (in air) = 2402 kg/m^3
3. Density of Concrete (in water) = 1402 kg/m^3
4. Density of Saturated Backfill = 1120 kg/m^3

Procedure

A. Determine The Buoyant Force Exerted On The Station
   1. Determine the buoyant force that acts on the grinder pump station when it is submerged in water.
   2. Subtract the weight of the station from the buoyant force due to the submerged tank to determine the net buoyant force acting on the station.

B. Determine The Ballast Force Exerted On The Station
   1. Determine the ballast force applied to the station from the concrete and saturated soil surrounding the station.

C. Subtract The Ballast Force From the Buoyant Force
   1. Note — if the installation site conditions are different from those listed above, the consulting engineer should recalculate the concrete ballast.

Ballast Calculations

The following calculations are to outline the areas used to determine the volumes of the different materials for the ballast. All sections referred to in the calculations are marked on the accompanying drawing.

Sample Calculation GP 2014i, 1000 mm x 2000 mm Station

Volume of Station = 1.615 m^3

Tank Weight = 95 kg

Station Height = 2.0 m

A. Buoyant Force
   1. The buoyant force acting on the submerged GP 2014i, 1000 mm x 2000 mm is equal to the weight of the displaced water for the section of the tank that is submerged.

$$F_{buoyant} = (\text{density of water})(\text{volume of station})$$
$$= (1000\ \text{kg/m}^3)(1.615\ \text{m}^3)$$
$$= 1615\ \text{kg}$$

2014i Grinder Pump Station Ballast Calculations

2. The net buoyant force acting on the station ($F_{net\text{-}buoyant}$) is equal to the buoyant force ($F_{buoyant}$) minus the weight of the station tank.

$F_{net\text{-}buoyant}$ = 1615 kg – 95 kg
= 1520 kg

B. Ballast Force

1. Determine the volume of concrete & soil

Section I: Used To Determine The Volume Of Concrete

Volume = (Height)(Area)
= (.203 m)(π)((1.422 m)^2 – (1.014 m)^2)/4
= (.203 m)(.781 m^2)
= .158 m^3

Section II: Used To Determine The Volume Of Saturated Soil

Volume = (Height)(Area)
= (2.0 m – .203 m)(π)((1.422 m)^2 – (1.014 m)^2)/4
= (1.797 m)(.781 m^2)
= 1.403 m^3

2. Determine the combined ballast

Ballast (total) = Ballast (concrete) + Ballast (saturated soil)
= ($V_{concrete}$)(density concrete in water) + (V_{soil})(density saturated soil)
= (.158 m^3)(1402 kg/m^3) + (1.403m^3)(1120 kg/m^3)
= 222 kg + 1571 kg
= 1793 kg

C. Subtract the net buoyant force from the ballast force to determine the final condition

Final Condition = Ballast Force – Net Buoyant Force
= 1793 kg – 1520 kg
= 273 kg (excess ballast)

The approach outlined above may be used to calculate the ballast requirements listed below.

Chart 1

GP Model 2014i	Station Volume (m³)	FNet-Bouyant (kg)	Tank Weight (kg)	FBallast (kg)	Volume Concrete (m³)*	Weight Concrete in Air (kg)*	Minimum Diameter of Concrete Anchor (mm)	Minimum Thickness of Concrete Anchor (mm)
1000 x 2000	1.615	1520	95	1793	.157	380	1422	203
1500 x 2000	3.620	3440	180	3663	.322	777	2082	203

* Volume calculated is for minimum dimensions given. Minimum dimensions must be met or exceeded for actual application.

2014i
1000 x 2000

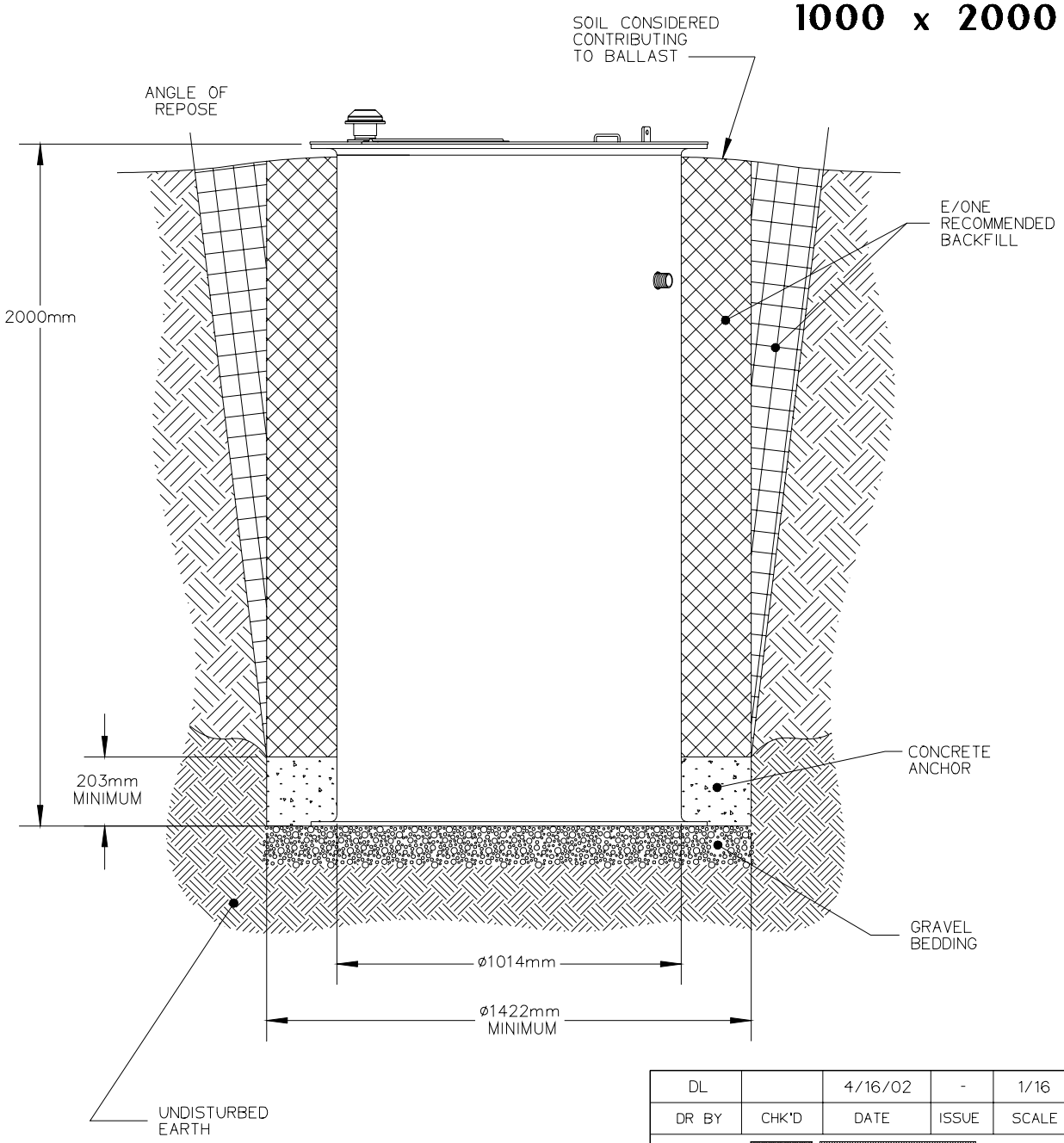

DL		4/16/02	-	1/16
DR BY	CHK'D	DATE	ISSUE	SCALE

e one SEWER SYSTEMS

BALLAST INFORMATION
2014i SERIES

A Precision Castparts Company

Environment One Corporation
2773 Balltown Road
Niskayuna, New York 12309–1090 USA

Voice: (01) 518.346.6161
Fax: 518.346.6188

www.eone.com

PA1779P01 Rev B
1/09